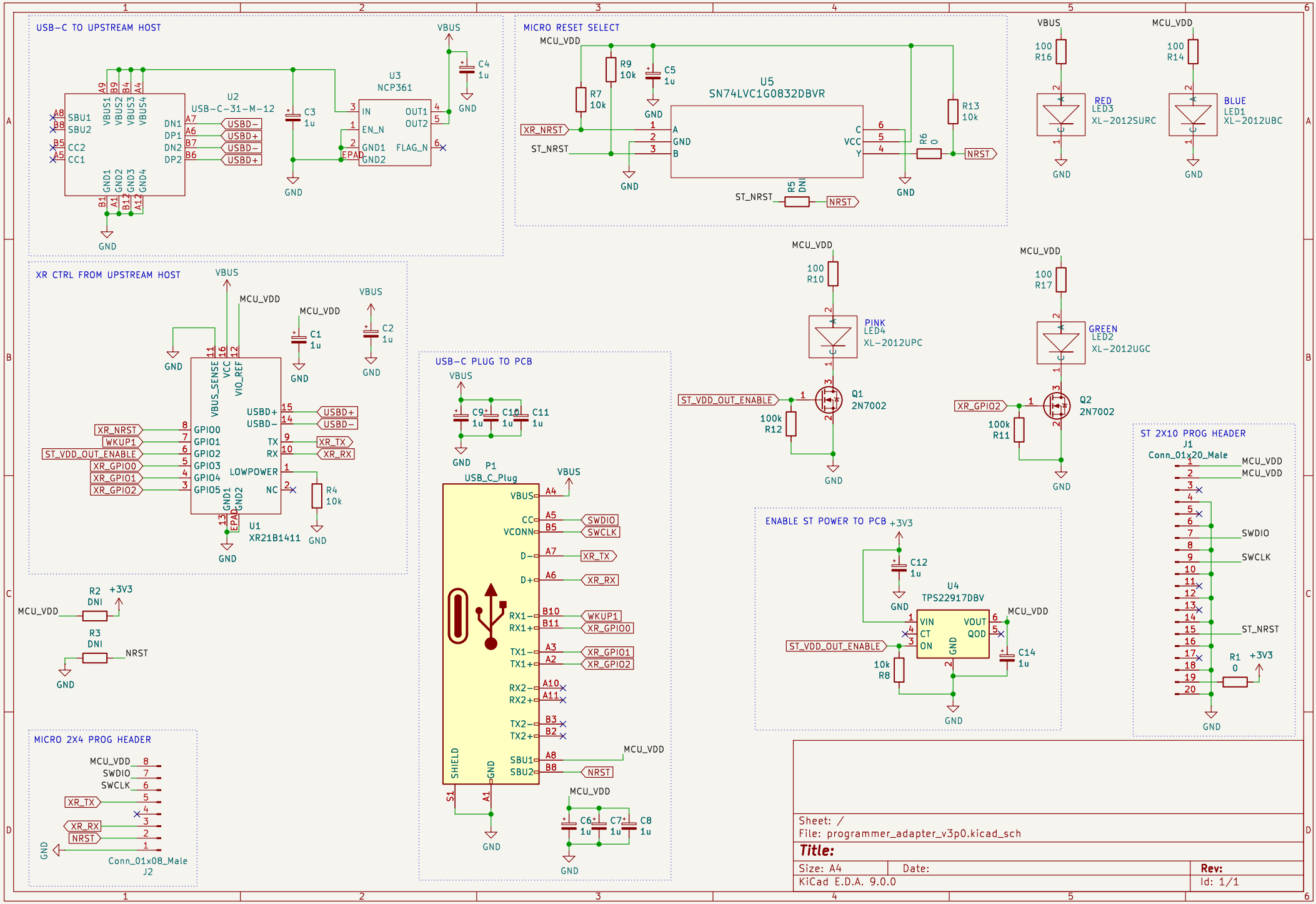
USB-C TO UPSTREAM HOST
U2
USB-C-31-M-12
U3
NCP361
C3
1u
C4
1u
VBUS
GND
MICRO RESET SELECT
MCU_VDD
R9
10k
R7
10k
C5
1u
U5
SN74LVC1G0832DBVR
R13
10k
R6
0
R5
DNI
XR_NRST
ST_NRST
NRST
R16
100
RED
LED3
XL-2012SURC
R14
100
BLUE
LED1
XL-2012UBC
XR CTRL FROM UPSTREAM HOST
U1
XR21B1411
C1
1u
C2
1u
R4
10k
USBD+
USBD-
XR_TX
XR_RX
WKUP1
ST_VDD_OUT_ENABLE
XR_GPIO0
XR_GPIO1
XR_GPIO2
USB-C PLUG TO PCB
P1
USB_C_Plug
C9
1u
C10
1u
C11
1u
C6
1u
C7
1u
C8
1u
SWDIO
SWCLK
R10
100
PINK
LED4
XL-2012UPC
Q1
2N7002
R12
100k
R17
100
GREEN
LED2
XL-2012UGC
Q2
2N7002
R11
100k
ST 2X10 PROG HEADER
J1
Conn_01x20_Male
R1
0
+3V3
R2
DNI
R3
DNI
ENABLE ST POWER TO PCB
U4
TPS22917DBV
C12
1u
C14
1u
R8
10k
MICRO 2X4 PROG HEADER
Conn_01x08_Male
J2
Sheet: /
File: programmer_adapter_v3p0.kicad_sch
Title:
Size: A4
Date:
Rev:
KiCad E.D.A. 9.0.0
Id: 1/1