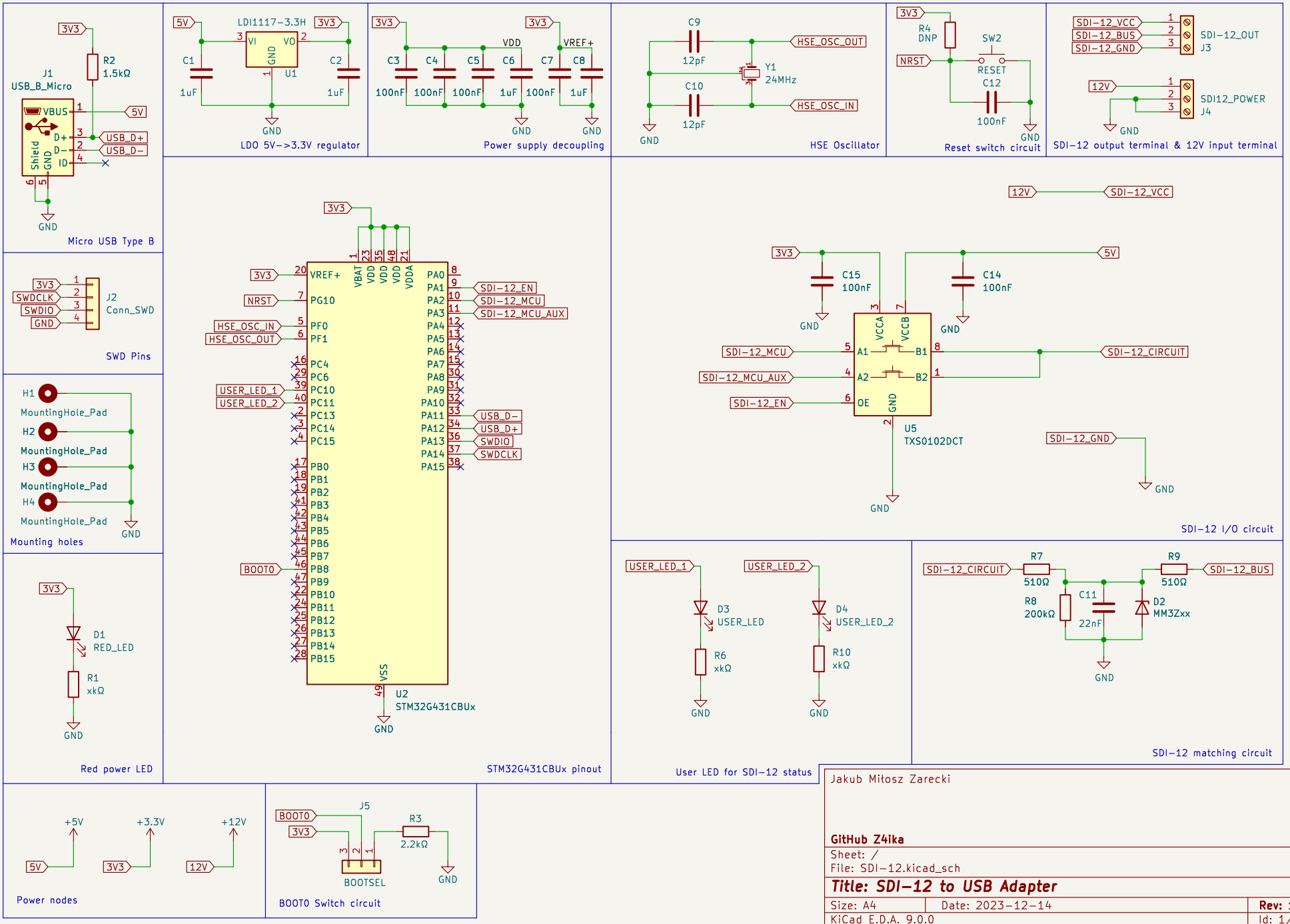
J1
USB_B_Micro
R2
1.5kΩ
VBUS
D+
D−
ID
Shield
GND
USB_D+
USB_D−
Micro USB Type B
LDI1117−3.3H
U1
VI
VO
C1
1uF
C2
1uF
LDO 5V−>3.3V regulator
C3
C4
C5
C6
C7
C8
100nF
VDD
VREF+
Power supply decoupling
C9
C10
12pF
Y1
24MHz
HSE_OSC_OUT
HSE_OSC_IN
HSE Oscillator
R4
DNP
SW2
RESET
NRST
C12
100nF
Reset switch circuit
SDI−12_VCC
SDI−12_BUS
SDI−12_GND
SDI−12_OUT
J3
12V
SDI12_POWER
J4
SDI−12 output terminal & 12V input terminal
J2
Conn_SWD
SWDCLK
SWDIO
SWD Pins
H1
H2
H3
H4
MountingHole_Pad
Mounting holes
D1
RED_LED
R1
xkΩ
Red power LED
U2
STM32G431CBUx
VREF+
VBAT
VDD
VDDA
VSS
PG10
PF0
PF1
PC4
PC6
PC10
PC11
PC13
PC14
PC15
PB0
PB1
PB2
PB3
PB4
PB5
PB6
PB7
PB8
PB9
PB10
PB11
PB12
PB13
PB14
PB15
PA0
PA1
PA2
PA3
PA4
PA5
PA6
PA7
PA8
PA9
PA10
PA11
PA12
PA13
PA14
PA15
BOOT0
USB_LED_1
USB_LED_2
SDI−12_EN
SDI−12_MCU
SDI−12_MCU_AUX
STM32G431CBUx pinout
C15
100nF
C14
100nF
U5
TXS0102DCT
VCCA
VCCB
A1
A2
OE
B1
B2
SDI−12_CIRCUIT
SDI−12 I/O circuit
D3
USER_LED
R6
xkΩ
D4
USER_LED_2
R10
xkΩ
User LED for SDI−12 status
R7
510Ω
R8
200kΩ
C11
22nF
R9
510Ω
D2
MM3Zxx
SDI−12_BUS
SDI−12 matching circuit
+5V
+3.3V
+12V
Power nodes
J5
R3
2.2kΩ
BOOTSEL
BOOT0 Switch circuit
Jakub Miłosz Zarecki
GitHub Z4ika
Sheet: /
File: SDI−12.kicad_sch
Title: SDI−12 to USB Adapter
Size: A4
Date: 2023−12−14
Rev: 1.3
KiCad E.D.A. 9.0.0
Id: 1/1