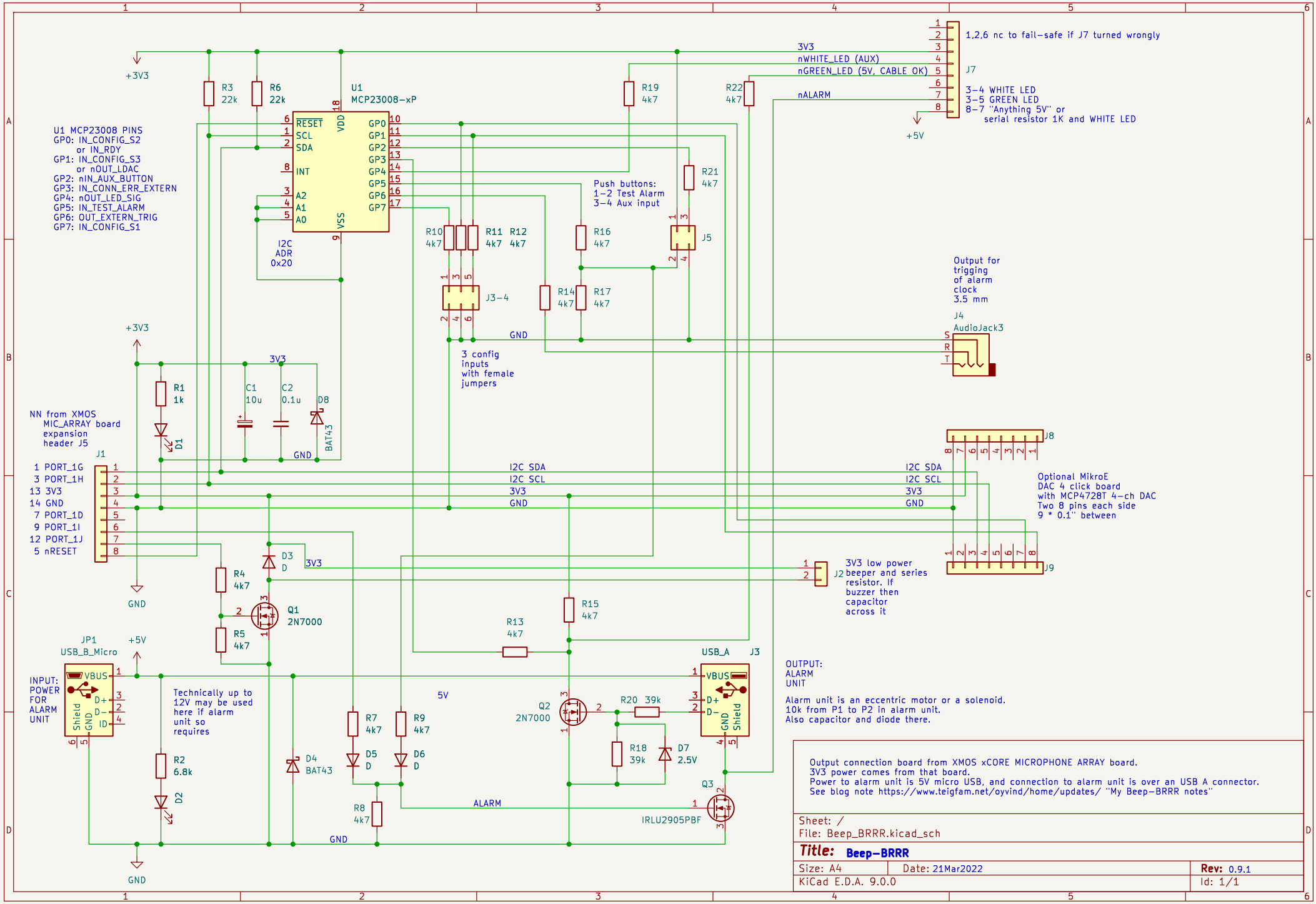
U1 MCP23008 PINS
GP0: IN_CONFIG_S2
or IN_RDY
GP1: IN_CONFIG_S3
or nOUT_LDAC
GP2: nIN_AUX_BUTTON
GP3: IN_CONN_ERR_EXTERN
GP4: nOUT_LED_SIG
GP5: IN_TEST_ALARM
GP6: OUT_EXTERN_TRIG
GP7: IN_CONFIG_S1
U1
MCP23008-xP
RESET
SCL
SDA
INT
A2
A1
A0
VDD
VSS
GP0
GP1
GP2
GP3
GP4
GP5
GP6
GP7
I2C
ADR
0x20
+3V3
R3
22k
R6
22k
R19
4k7
R22
4k7
R21
4k7
R10
4k7
R11
4k7
R12
4k7
R16
4k7
R14
4k7
R17
4k7
J3-4
J5
Push buttons:
1-2 Test Alarm
3-4 Aux input
3 config
inputs
with female
jumpers
GND
3V3
nWHITE_LED (AUX)
nGREEN_LED (5V, CABLE OK)
nALARM
J7
1,2,6 nc to fail-safe if J7 turned wrongly
3-4 WHITE LED
3-5 GREEN LED
8-7 "Anything 5V" or
serial resistor 1K and WHITE LED
+5V
Output for
trigging
of alarm
clock
3.5 mm
J4
AudioJack3
S
R
T
R1
1k
D1
C1
10u
C2
0.1u
D8
BAT43
NN from XMOS
MIC_ARRAY board
expansion
header J5
J1
1 PORT_1G
3 PORT_1H
13 3V3
14 GND
7 PORT_1D
9 PORT_1I
12 PORT_1J
5 nRESET
I2C SDA
I2C SCL
J8
J9
Optional MikroE
DAC 4 click board
with MCP4728T 4-ch DAC
Two 8 pins each side
9 * 0.1" between
D3
D
R4
4k7
R5
4k7
Q1
2N7000
J2
3V3 low power
beeper and series
resistor. If
buzzer then
capacitor
across it
R15
4k7
R13
4k7
JP1
USB_B_Micro
INPUT:
POWER
FOR
ALARM
UNIT
VBUS
D+
D-
ID
Shield
GND
Technically up to
12V may be used
here if alarm
unit so
requires
R2
6.8k
D2
D4
BAT43
5V
R7
4k7
R9
4k7
D5
D
D6
D
R8
4k7
ALARM
Q2
2N7000
R20
39k
R18
39k
D7
2.5V
USB_A
J3
Q3
IRLU2905PBF
OUTPUT:
ALARM
UNIT
Alarm unit is an eccentric motor or a solenoid.
10k from P1 to P2 in alarm unit.
Also capacitor and diode there.
Output connection board from XMOS xCORE MICROPHONE ARRAY board.
3V3 power comes from that board.
Power to alarm unit is 5V micro USB, and connection to alarm unit is over an USB A connector.
See blog note https://www.teigfam.net/oyvind/home/updates/ "My Beep-BRRR notes"
Sheet: /
File: Beep_BRRR.kicad_sch
Title: Beep-BRRR
Size: A4
Date: 21Mar2022
Rev: 0.9.1
KiCad E.D.A. 9.0.0
Id: 1/1